PARTS MANUAL

Models

EH035V for Wacker ENGINE

PUB-EP
Rev. 06/05

Robin America, Inc.

940 Lively Blvd. • Wood Dale, IL 60191 • Phone: 630-350-8200 • Fax: 630-350-8212
e-mail: sales@robinamerica.com • www.robinamerica.com

© Copyright 2005 Robin America, Inc.

HOW TO USE THIS MANUAL

Robin engines are identified by MODEL, SPECIFICATION, and CODE NUMBER. For each model there may be many different versions called specifications. Each specification will be unique in some way. The difference may only be the paint color or it may have a different type of PTO or some other significant difference.

In order the identify the correct service part number, it is important to confirm the specification and code numbers for your engine. The specification and code number together are know as the PRODUCT NUMBER.

All Robin 4 cycle engines have a Product Number label similar to the label illustrated below.

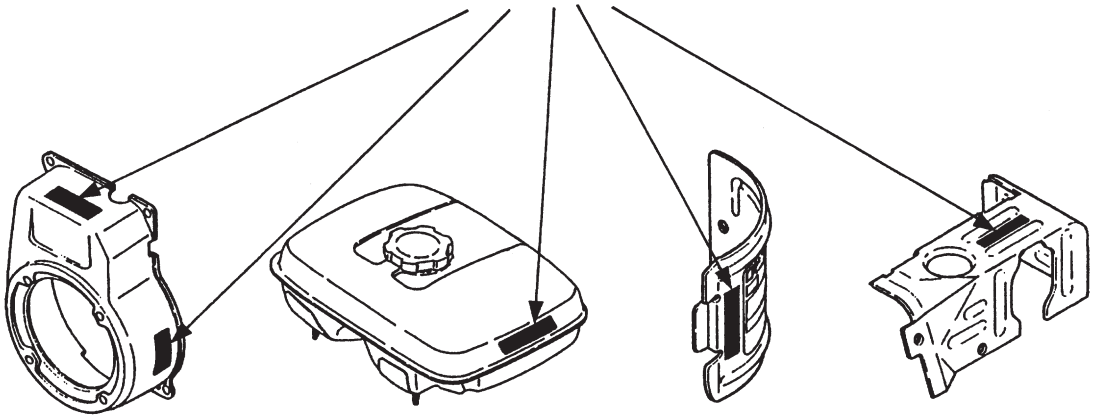

The Product Number Label has a 15 digit alphanumeric string that consists of the SPECIFICATION (SPEC) number (11 digits) and the CODE number (4 digits). Please note the illustration below:

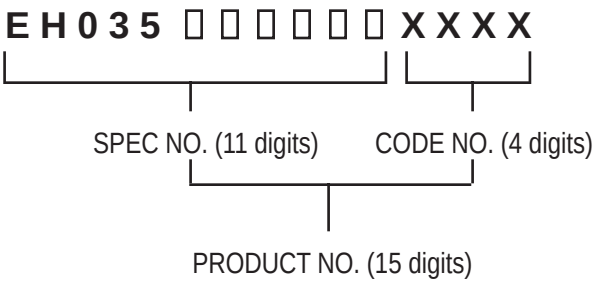

MANUAL LAYOUT

1— **SECTION 6 FUEL GROUP**

2— FIG. 600

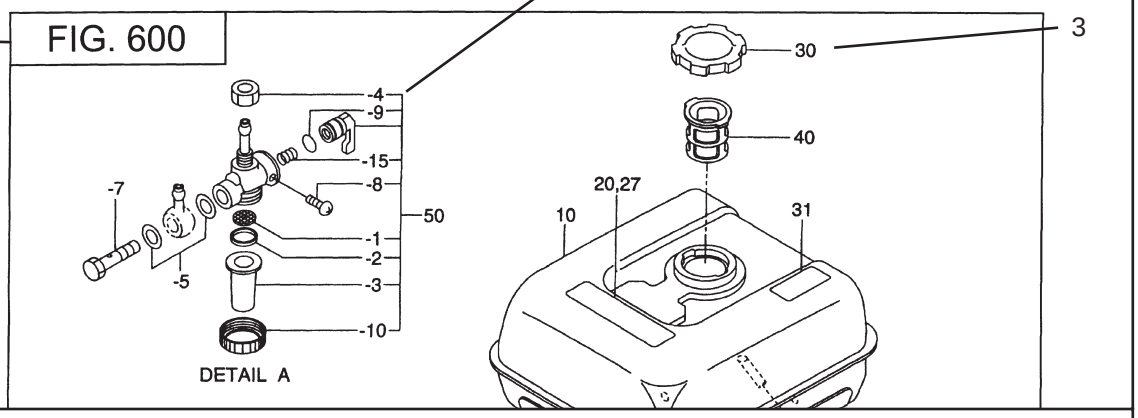

1— **SECTION 6 FUEL GROUP**

6 7 9 2 3 5 4 8

REF.	PART NO.	DESCRIPTION	QTY.	REMARKS	FROM-TO	FIG.
10	267-60103-01	FUEL TANK CP	1	YD, YS TYPE, BLACK		600
	267-60101-01	FUEL TANK CP	1	YELLOW		600
27	073-20039-00	LABEL, WARNING	1	YD, YS TYPE		600
30	043-04300-15	FUEL TANK CAP CP	1			600
31	267-95201-03	LABEL, EMISSION	1	YD, YS TYPE		600
40	064-13600-10	FUEL FILTER	1			600
50	064-20021-01	FUEL STRAINER AY	1			600
-1	064-20002-20	FILTER	1			600
-2	064-20002-30	GASKET	1			600
-3	064-20019-10	CUP	1			600

1. SECTION NAME — Parts are broadly classified according to their functions.
Refer to the Group Index (table of contents) for respective section name.

2. FIG. No. — The FIG. number indexes the reference and part numbers to the illustration. Figure numbers that vary only in the tens place (i.e..: 700 and 710) are in a group of the same section (i.e..:Electrical Device Group).

3. REF. No . — The Reference number identifies the part illustration with the corresponding part number in the part list.

4. SUBASSEMBLY — SUBASSEMBLY parts of part assembly are listed below the assembly part. The subassembly part reference number is indicated by the number led by "-" such as "-1", "-2".

5. PART NUMBER — It is the number assigned for sales unit. Use the PART No. when making an order.

6. DESCRIPTION — It is designation of the part.

7. QTY. — Quantity of each part used for each product.

8. REMARKS — This gives a distinctive feature and/or a supplementary comment for the type, the specification, and the part concerned. It also shows part number(s) interchangeable for the part.

9. FROM-TO — This section shows the CODE No. to indicate the history of progress in which improved parts have been introduced in the product. The FROM-TO CODE No. helps to identify PART No. being employed in the product concerned. See the examples below:

-	The part is used in the product irrespective of CODE No.
2101-	The part is used in the products with CODE No. of 2101 and after this number.
- 2100	The part is used in the products with CODE No. of 2100 and before this number.

GROUP INDEX

Group Name	Page
CRANKCASE GROUP	6
CRANKSHAFT, PISTON GROUP	8
INTAKE and EXHAUST GROUP	10
COOLING and STARTING GROUP	12
FUEL, LUBRICANT GROUP	14
ELECTRIC DEVICE GROUP	16
CLUTCH GROUP	18
ACCESSORY GROUP	20

INDEX OF DESCRIPTION SYMBOLS

SYMBOL	DESCRIPTION	SYMBOL	DESCRIPTION
AY	ASSEMBLY	P=	PITCH (in mm)
CP	COMPLETE	P.T.O. (PTO)	POWER TAKE OFF
EX	EXPORT (from Japan)	REF.	REFERENCE
FIG	FIGURE	R.H. (RH)	RIGHT HAND SIDE
FR	FRONT	RR.	REAR
"	INCH	STD.	STANDARD
INCL.	INCLUDE	SW	SWITCH
~L	LITER	T=	THICKNESS (in mm)
L=	LENGTH (in. mm)	UN	UNIT
L.H. (LH)	LEFT-HAND SIDE	U.S	UNDER SIZE
MECH	MECHANICAL	~V	VOLTAGE
NO (NON)	NONE	~W	WATT
OPT	OPTIONAL	W/	WITH
O.S.	OVER SIZE	W/O	WITHOUT

FIG. 100

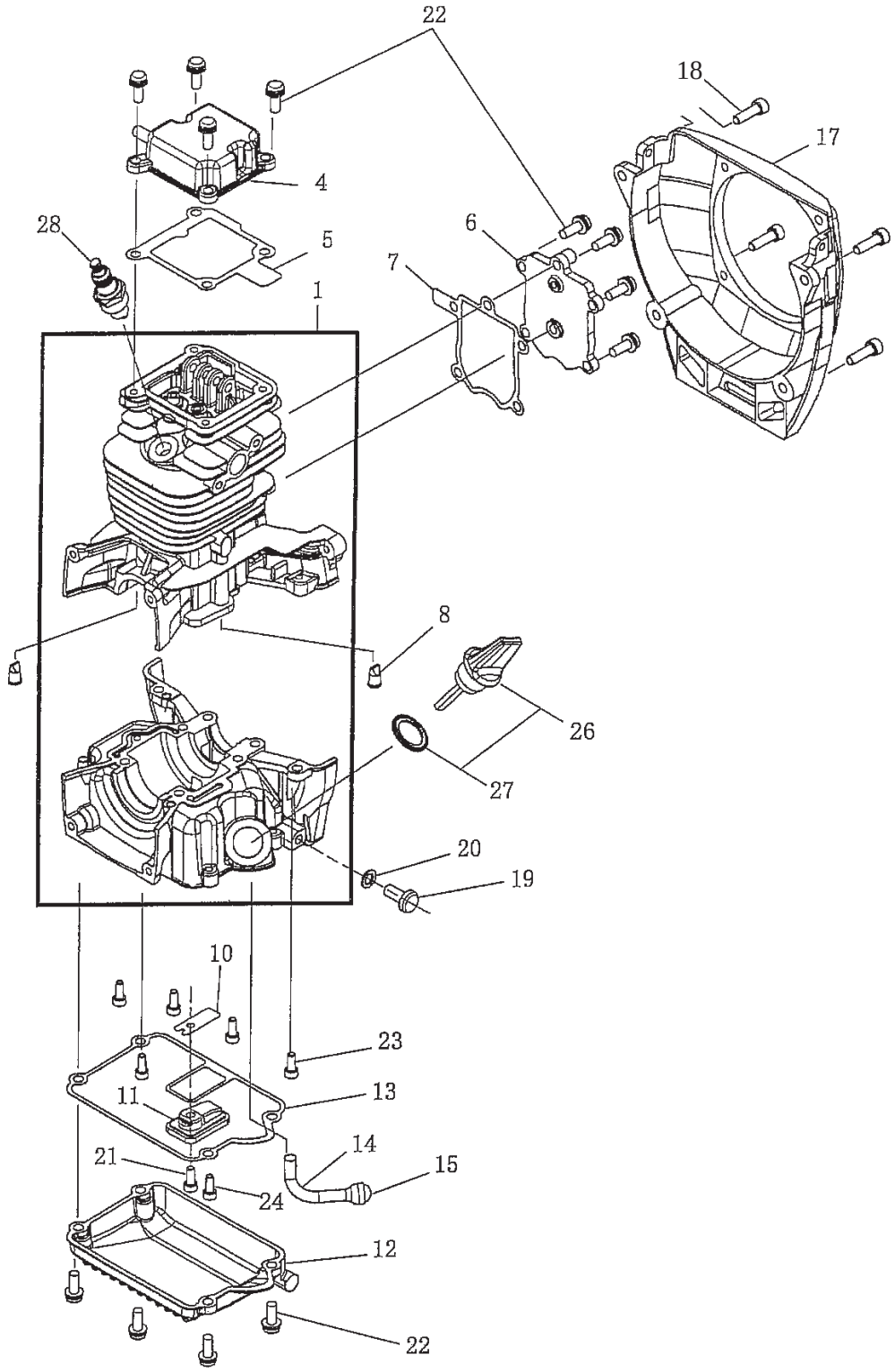

SECTION 1 CRANKCASE GROUP

REF.	PART NO.	DESCRIPTION	QTY.	REMARKS	FROM-TO	FIG.
1	593-10110-00	CYLINDER BLOCK SET	1			100
4	593-15014-00	ROCKER COVER	1			100
5	593-15016-00	GASKET, rocker cover	1			100
6	593-15015-00	CAMGEAR COVER	1			100
7	593-15017-00	GASKET, camgear cover	1			100
8	592-15018-00	CHECK VALVE	2			100
10	592-15010-00	LEAD VALVE	1			100
11	593-15013-00	RETAINER PLATE	1			100
12	593-65005-00	OIL CASE	1			100
13	593-65004-00	GASKET, case	1			100
14	593-65006-00	OIL TUBE	1			100
15	592-65003-00	OIL WEIGHT	1			100
17	593-55002-00-1	BLOWER HOUSING	1			100
18	011-90595-31	SOCKET HEAD BOLT	4			100
19	004-31060-80	SCREW, panhead	1			100
20	003-71060-00	GASKET, fiber	1			100
21	011-90499-60	SOCKET HEAD BOLT	1			100
22	004-36051-60	SCREW AY	13			100
23	011-90594-70	SOCKET HEAD BOLT	4			100
24	011-90598-60	SOCKET HEAD BOLT	4			100
26	592-65006-00	OIL GAUGE	1			100
27	021-31699-90	GASKET	1			100
28	065-01099-50	SPARK PLUG	1			100

FIG. 200

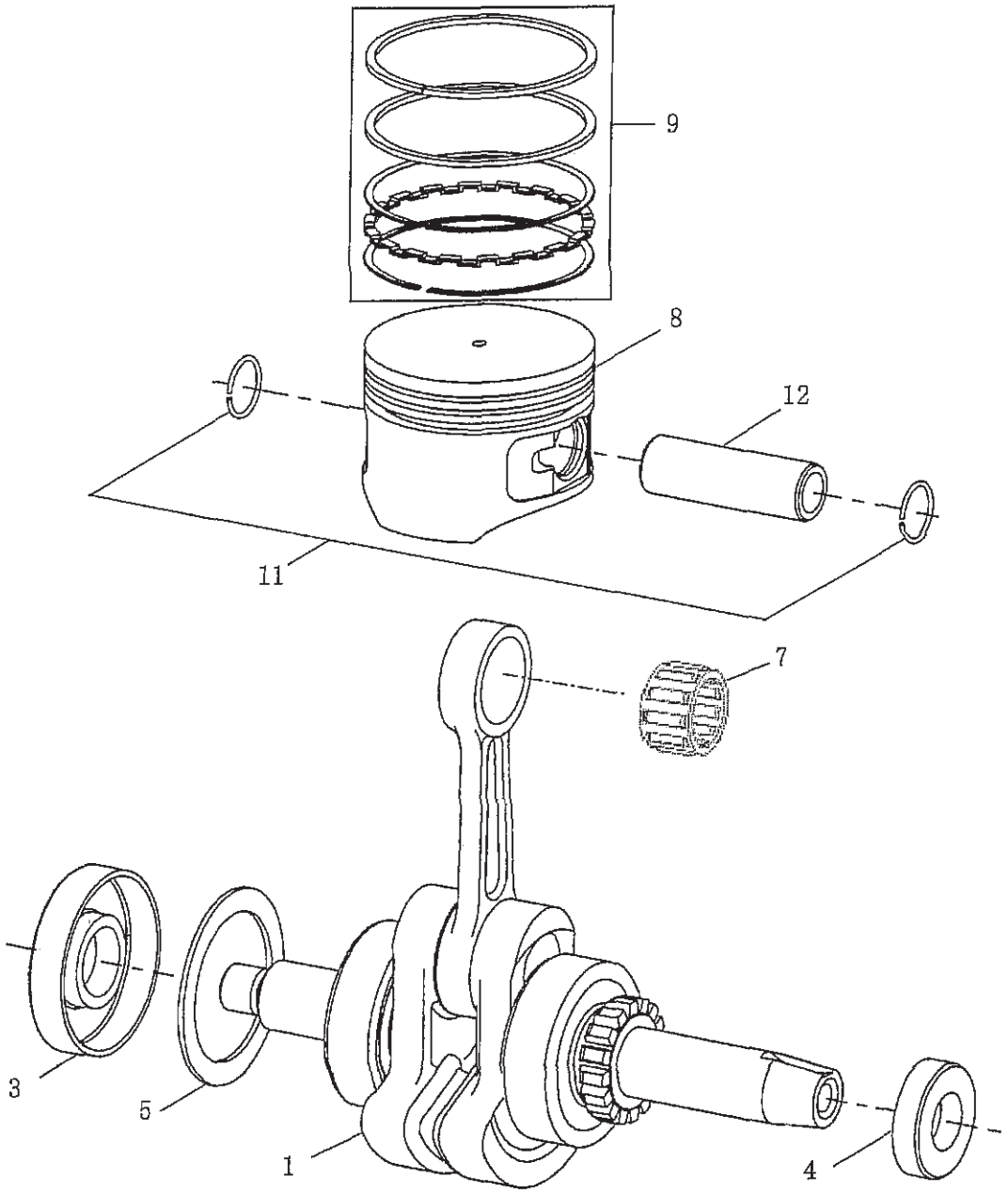

SECTION 2 CRANKSHAFT, PISTON GROUP

REF.	PART NO.	DESCRIPTION	QTY.	REMARKS	FROM-TO	FIG.
1	593-20060-00	CRANKSHAFT	1			200
3	044-01299-50	OIL SEAL, L	1			200
4	044-01299-40	OIL SEAL, S	1			200
5	593-25010-00	CLIP	1			200
7	541-25013-00	NEEDLE ROLLER BEARING	1			200
8	593-25004-00	PISTON	1			200
9	593-20040-00	PISTON RING SET	1			200
11	056-50999-90	CLIP	2			200
12	593-25009-00	PISTON PIN	1			200

FIG. 300

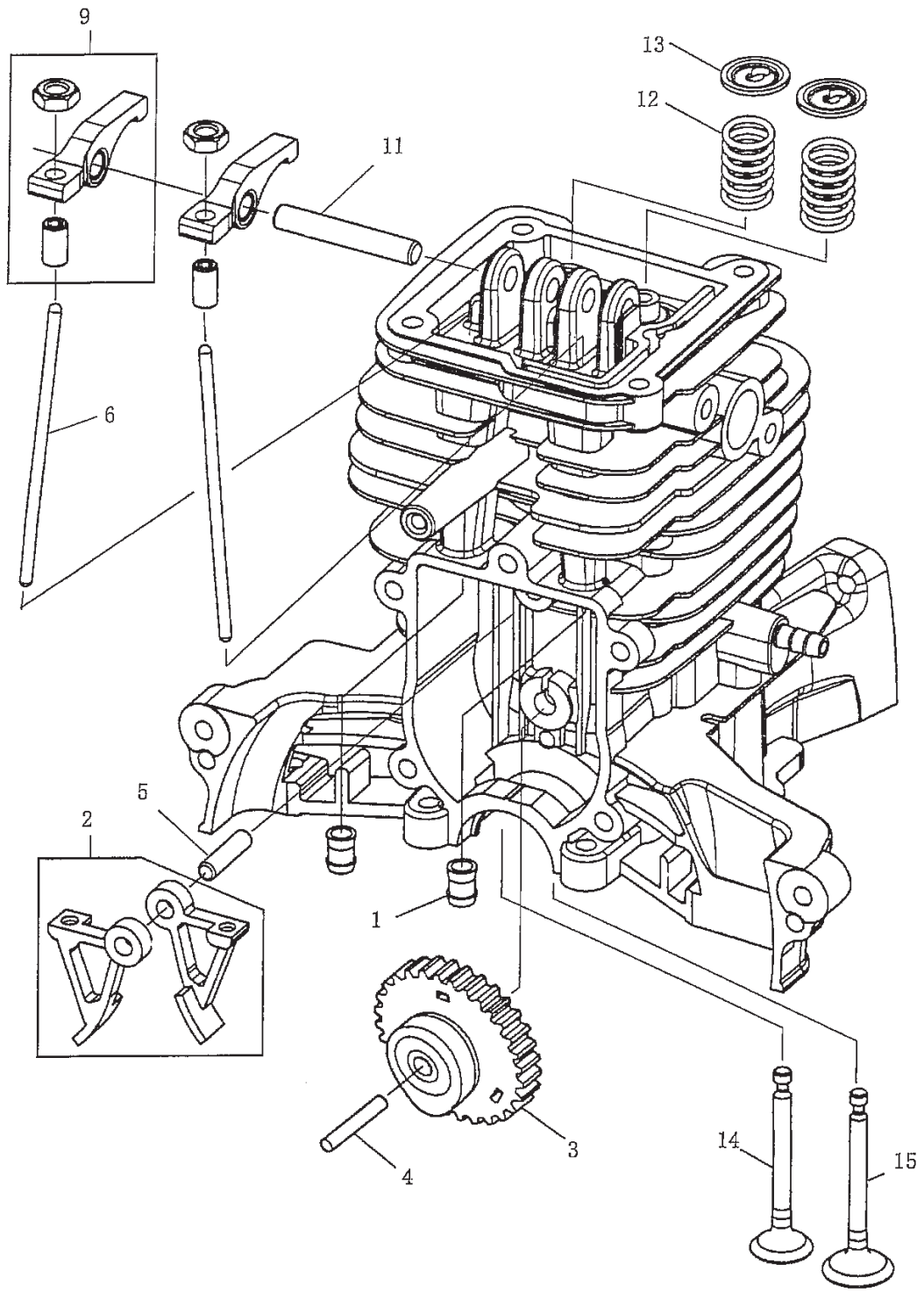

SECTION 3 CAMSHAFT GROUP

REF.	PART NO.	DESCRIPTION	QTY.	REMARKS	FROM-TO	FIG.
1	592-15014-00	SPACER	2			300
2	592-35000-01	CAMLIFTER	2			300
3	593-30070-00	CAMGEAR AY	1			300
4	592-35005-01	CAMGEAR SHAFT	1			300
5	592-35006-00	CAMLIFTER SHAFT	1			300
6	593-35000-00	PUSH ROD	2			300
9	593-30020-00-1	ROCKER ARM	2			300
11	593-35001-00	ROCKER SHAFT	1			300
12	593-35002-00	VALVE SPRING	2			300
13	593-35003-00	RETAINER SPRING	2			300
14	593-35004-00	EXHAUST VALVE	1			300
15	593-35005-00	INTAKE VALVE	1			300

FIG. 400

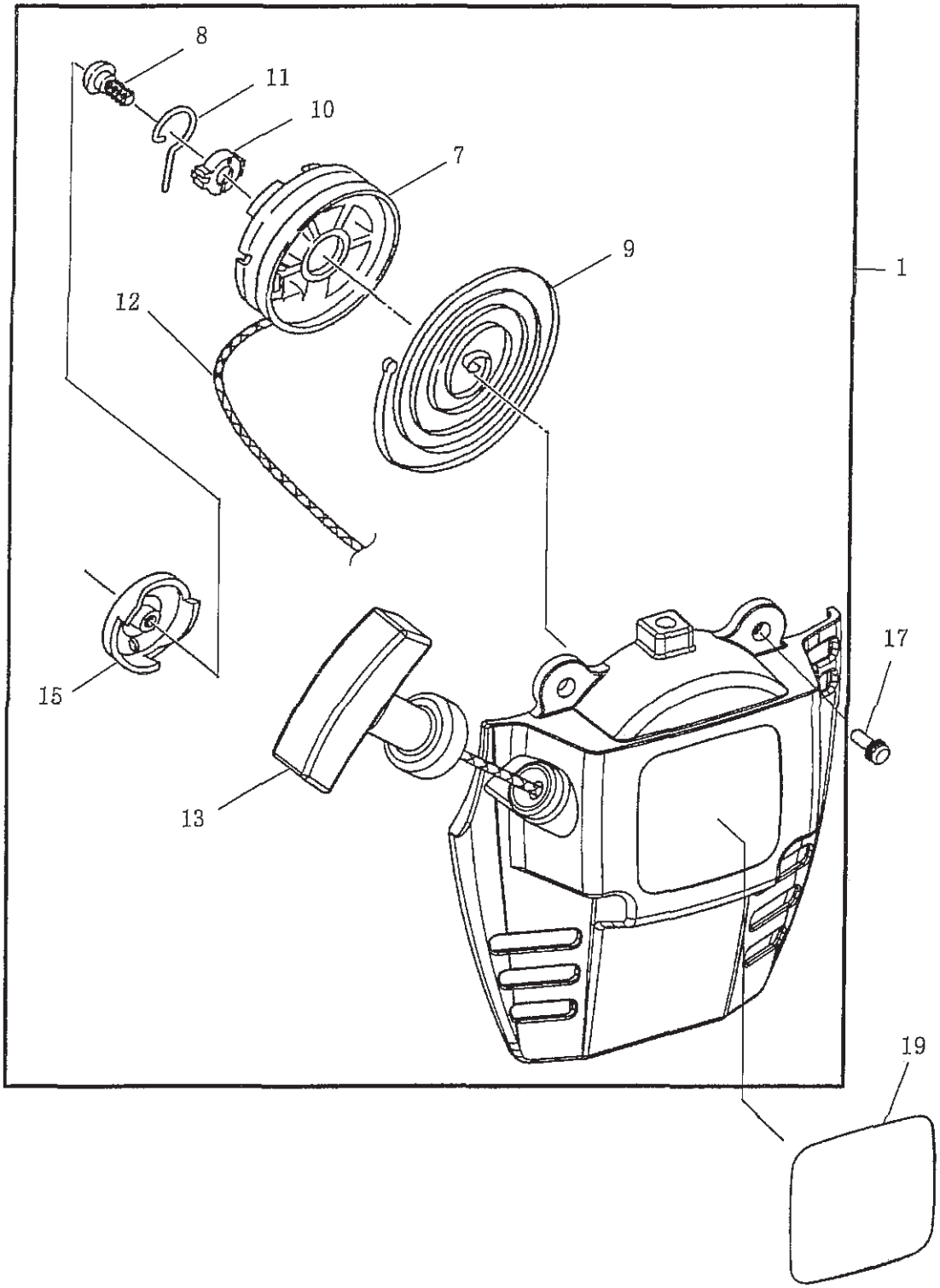

SECTION 4 RECOIL STARTER GROUP

REF.	PART NO.	DESCRIPTION	QTY.	REMARKS	FROM-TO	FIG.
1	593-50040-00	RECOIL STARTER AY	1			400
7	592-50010-30	REEL	1			400
8	519-50020-60	SET SCREW	1			400
9	521-50020-30	SPIRAL SPRING	1			400
10	519-50021-10	COLLAR	1			400
11	519-50021-00	SWING ARM	1			400
12	531-50220-40	STARTER ROPE	1			400
13	521-50021-10	STARTER KNOB	1			400
15	519-55000-00	PULLEY	1			400
17	014-00594-80	SCREW AY	4			400
19	593-95016-00	LABEL, model	1			400

FIG. 500

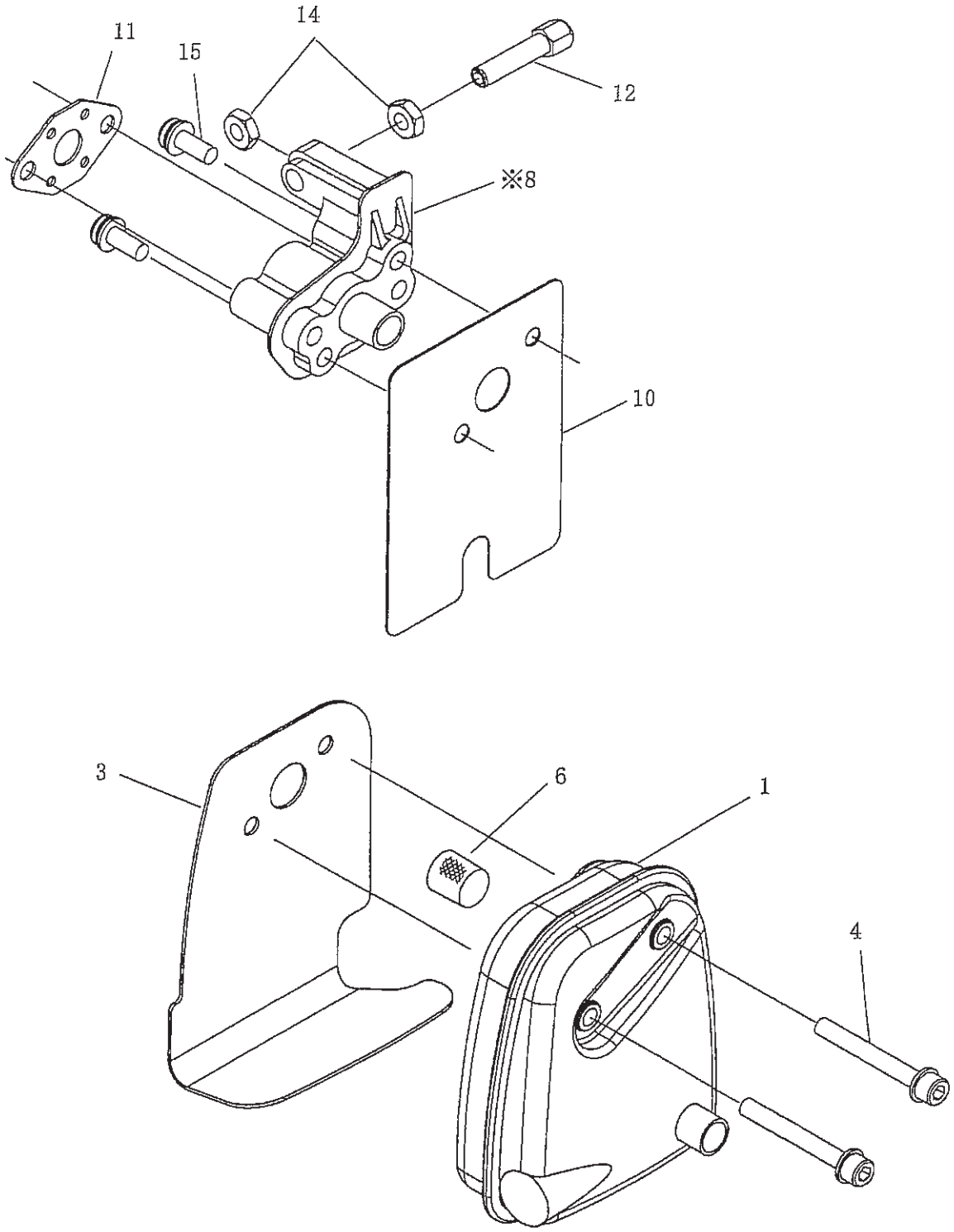

SECTION 5 MUFFLER & INSULATOR GROUP

REF.	PART NO.	DESCRIPTION	QTY.	REMARKS	FROM-TO	FIG.
1	593-30060-00	MUFFLER	1			500
3	592-35016-01	GASKET, muffler	1			500
4	011-90595-20	SOCKET HEAD BOLT	2			500
6	592-30080-10	SPARK ARRESTER	1			500
8	592-30050-01	INSULATOR	1			500
9	017-00599-80	NUT	2			500
10	593-35020-00-1	GASKET, insulator	1			500
11	510-35028-01	GASKET, air cleaner	1			500
12	014-90699-61	ADJUST SCREW	1			500
14	002-27060-00	NUT	2			500
15	014-00592-50	SCREW AY	2			500

FIG. 600

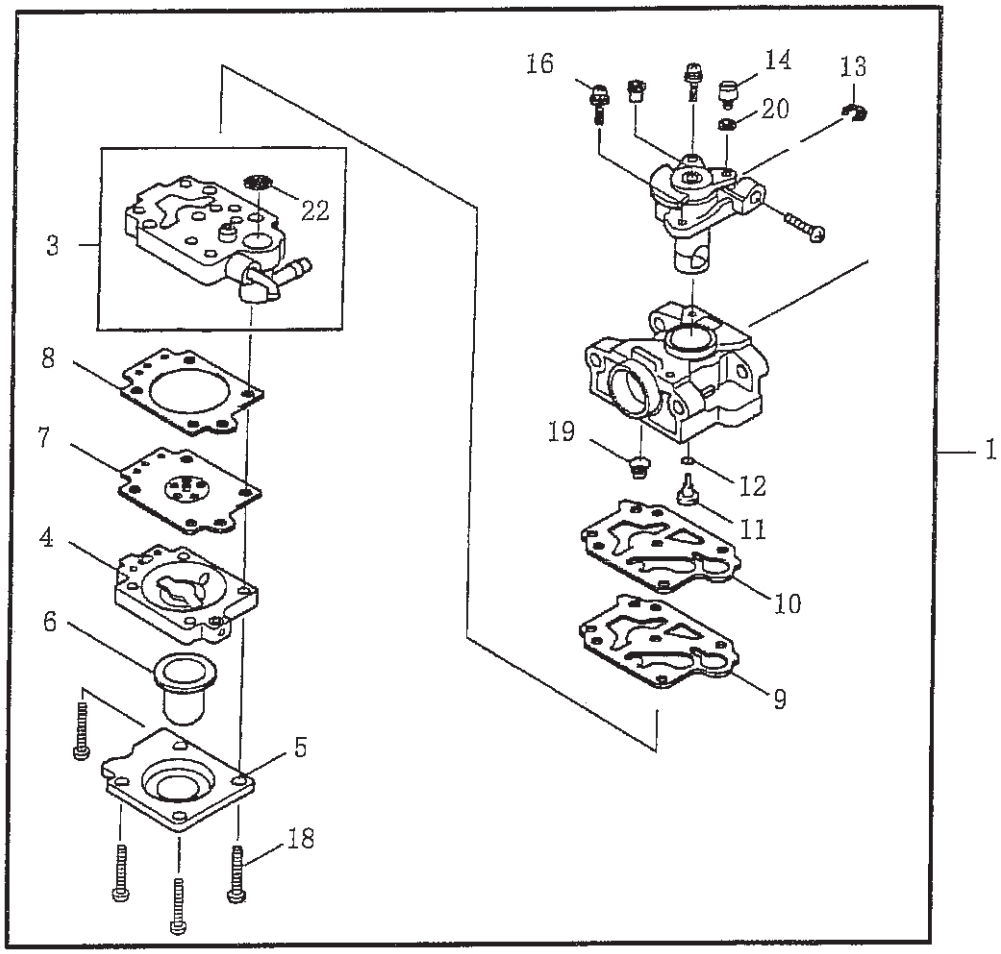

SECTION 6 CARBURETOR GROUP

REF.	PART NO.	DESCRIPTION	QTY.	REMARKS	FROM-TO	FIG.
1	593-60140-00	CARBURETOR	1			600
3	593-60150-20	PUMP BODY AY	1			600
4	523-60461-40	AIR PURGE BODY	1			600
5	523-60460-50	PRIMER PUMP AY	1			600
6	524-60011-50	PRIMER PUMP AY	1			600
7	592-60080-10	METERING DIAPHRAGM AY	1			600
8	523-60460-40	GASKET, metering diaphragm	1			600
9	524-60010-40	DIAPHRAGM PUMP	1			600
10	592-60020-40	GASKET, pump	1			600
11	592-60070-30	JET	1			600
12	524-60010-10	O RING	1			600
13	531-60051-20	SPRING RETAINING RING	1			600
14	523-60180-40	SWIVEL	1			600
16	520-60080-30	THROTTLE COLLAR SCREW	2			600
18	523-60460-10	SCREW, pump cover	4			600
19	592-60020-20	SPRING, pump	1			600
20	542-60050-30	WASHER	1			600
22	501-60040-10	INLET SCREEN	1			600

FIG. 700

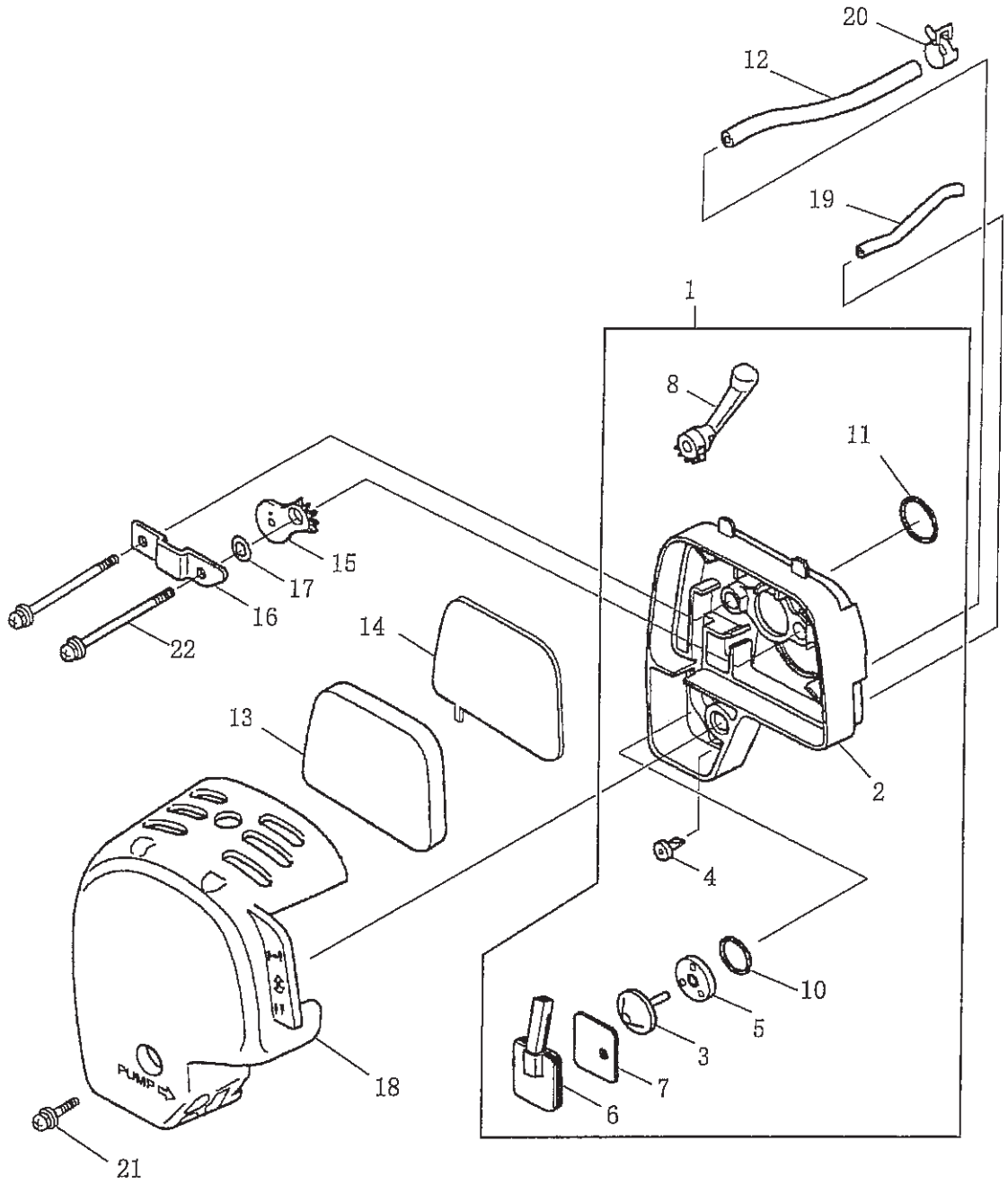

SECTION 7 AIR CLEANER GROUP

REF.	PART NO.	DESCRIPTION	QTY.	REMARKS	FROM-TO	FIG.
1	593-30010-00-1	CLEANER PLATE AY	1			700
2	593-35007-00-1	AIR CLEANER PLATE	1			700
3	531-65007-01	CHECK VALVE	1			700
4	592-35024-00	CHECK VALVE 1	1			700
5	592-35025-00	PLATE, check valve	1			700
6	593-35016-00	PLATE, separator	1			700
7	592-35035-00	GASKET, separator	1			700
8	592-35022-00-1	CHOKE LEVER	1			700
10	024-01399-70	O RING	1			700
11	024-01599-90	O RING	1			700
12	593-15009-00	BREATHER PIPE	1			700
13	593-35012-00-1	AIR CLEANER ELEMENT	1			700
14	593-35009-00	AIR CLEANER ELEMENT	1			700
15	592-35023-01	PLATE, choke	1			700
16	592-35026-00	PLATE	1			700
17	021-30699-90	GASKET, separator	1			700
18	593-35008-00	AIR CLEANER COVER	1			700
19	593-35021-00	PIPE	1			700
20	056-10800-10	HOSE CLAMP	1			700
21	014-00594-80	SCREW AY	1			700
22	592-35031-00	SCREW	2			700

FIG. 800

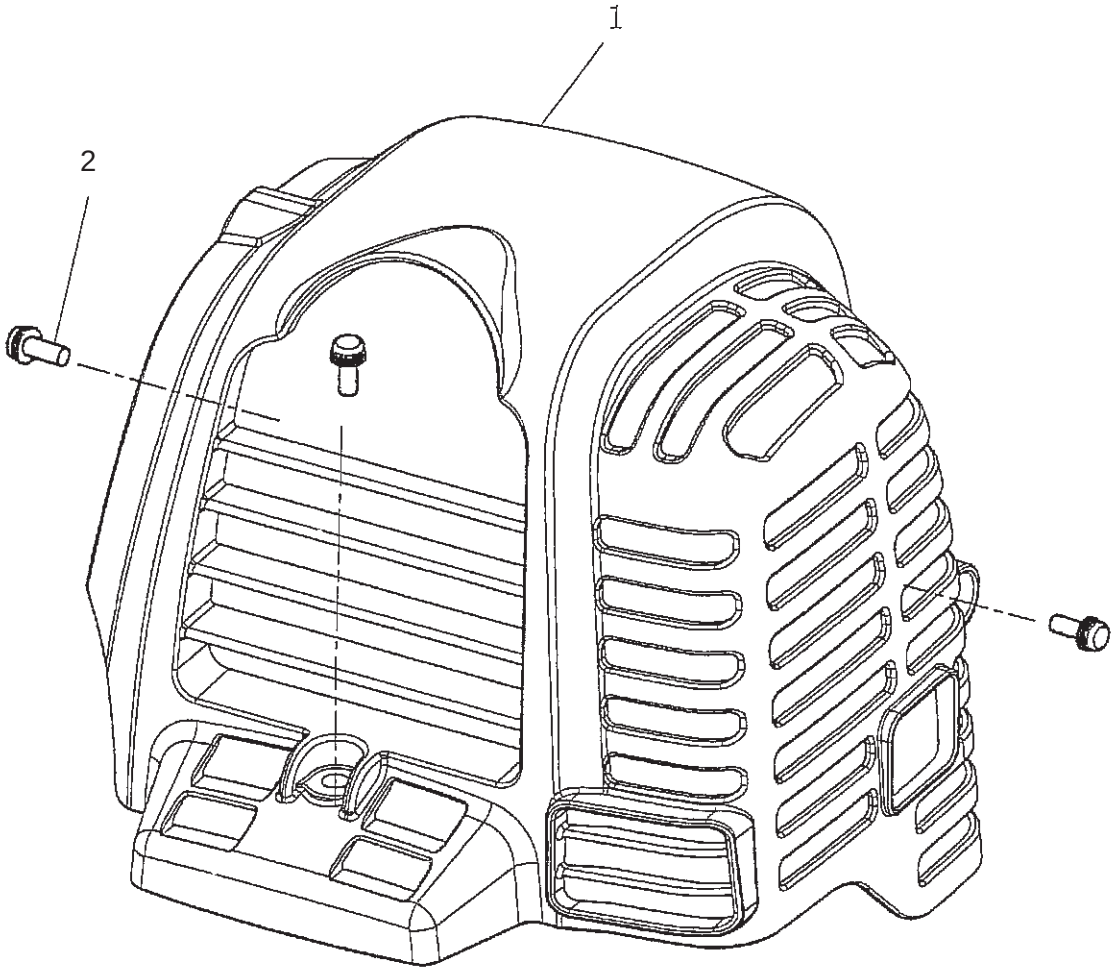

SECTION 8 CYLINDER COVER GROUP

REF.	PART NO.	DESCRIPTION	QTY.	REMARKS	FROM-TO	FIG.
1	593-55019-00	CYLINDER COVER	1			800
2	014-00593-70	SCREW AY	3			800

FIG. 900

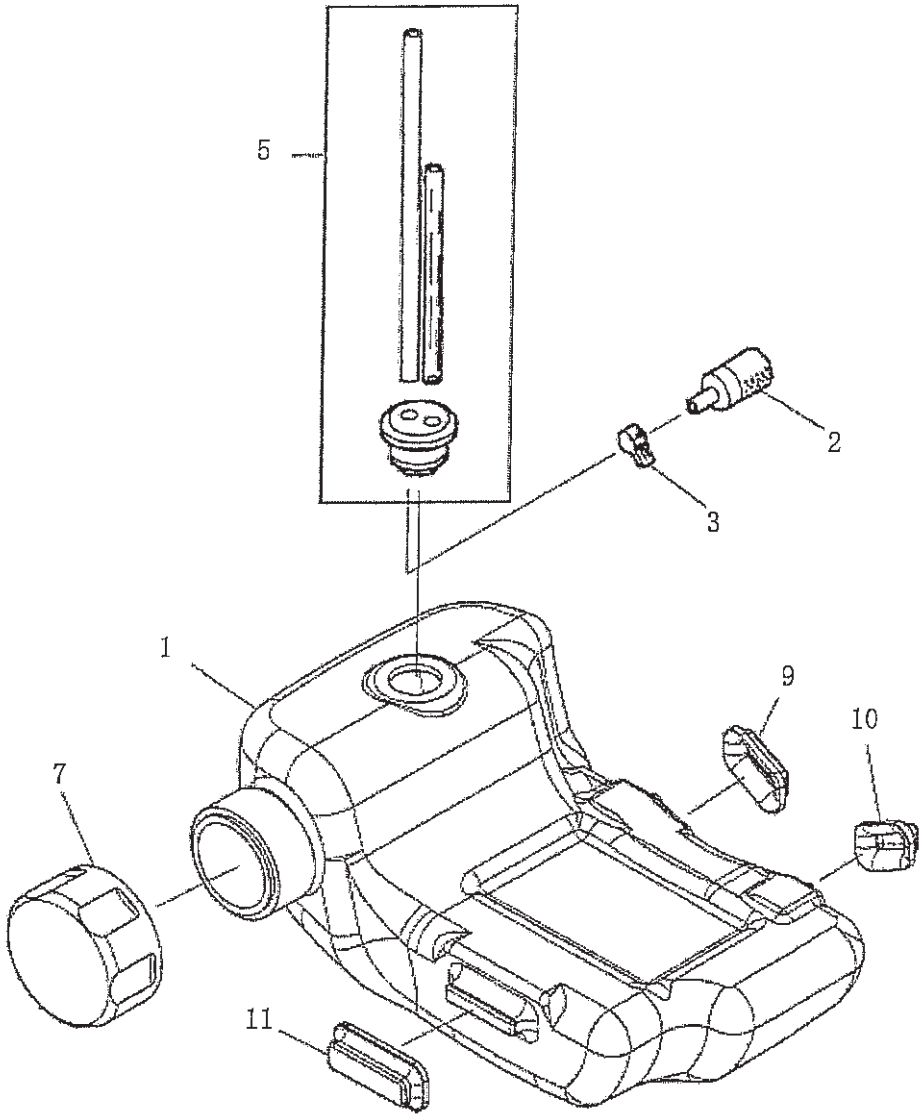

SECTION 9 FUEL TANK GROUP

REF.	PART NO.	DESCRIPTION	QTY.	REMARKS	FROM-TO	FIG.
1	593-65003-00	FUEL TANK	1			900
2	523-65039-00	FILTER	1			900
3	056-10599-90	HOSE CLAMP	1			900
5	593-60130-00	TUBE	1			900
7	592-60160-00	FUEL TANK CAP	1			900
9	503-65002-00-1	PLATE	1			900
10	503-65003-00-1	PLATE	1			900
11	519-65003-02	DAMPER	1			900

FIG. 1000

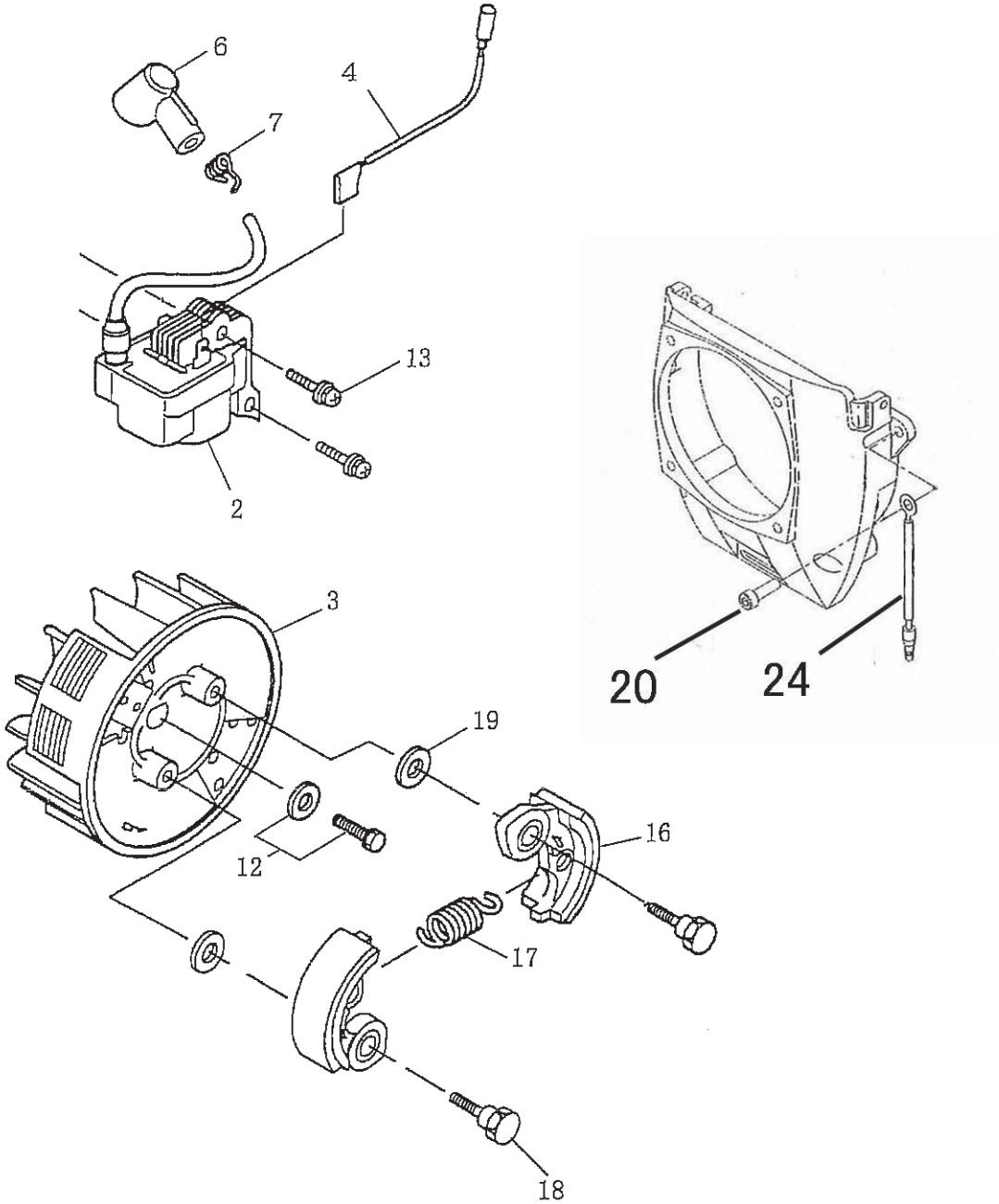

SECTION 10 FLYWHEEL & CLUTCH GROUP

REF.	PART NO.	DESCRIPTION	QTY.	REMARKS	FROM-TO	FIG.
2	593-70020-10	IGNITION COIL	1			1000
3	593-70010-20-1	FLYWHEEL	1			1000
4	525-70180-01-2	WIRE CP	1			1000
6	592-75001-00	PLUG CAP	1			1000
7	065-40099-31	SPRING, PLUG CAP	1			1000
12	013-00699-40	BOLT AY	1			1000
13	014-00499-20	SCREW	2			1000
16	531-80030-10	CLUTCH SHOE	2			1000
17	531-80030-20	CLUTCH SPRING	1			1000
18	593-85000-00	CLUTCH BOLT	2			1000
19	020-00898-00	WASHER	2			1000
20	011-90595-35	SOCKET HEAD BOLT	1			1000
24	616-55002-01	WIRE 1 CP	1			1000

FIG. 1100

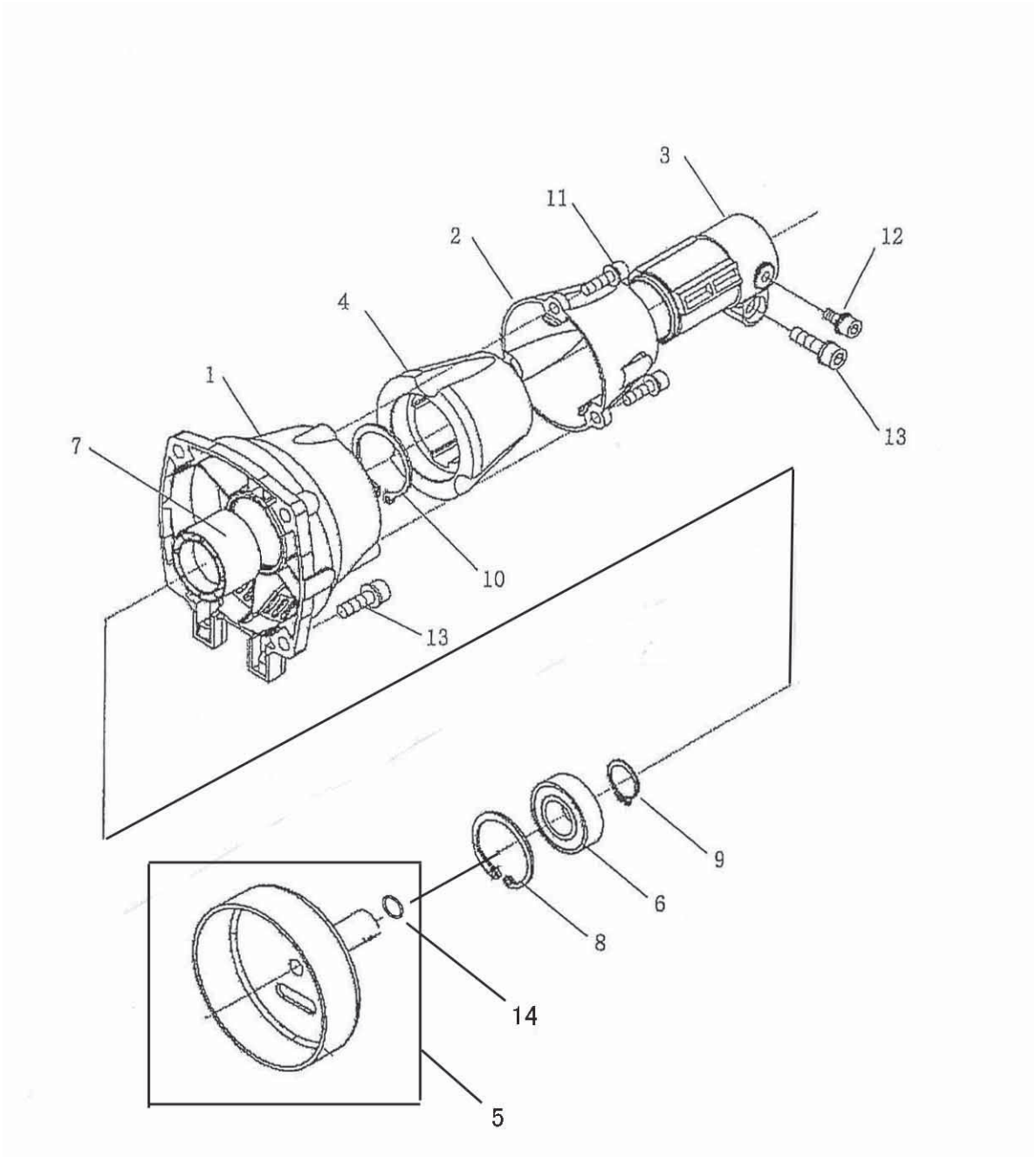

SECTION 11 CLUTCH CASE GROUP

REF.	PART NO.	DESCRIPTION	QTY.	REMARKS	FROM-TO	FIG.
1	634-15002-00	CASE, CLUTCH 1	1			1100
2	634-15003-00	CASE, CLUTCH 2	1			1100
3	634-15013-00	PIPE BRACKET	1			1100
4	593-85001-00	PIPE DAMPER	1			1100
5	593-80050-00	CLUTCH DRUM	1			1100
6	060-01798-10	BALL BEARING	1			1100
7	634-15006-00	SPACER	1			1100
8	003-14350-00	SNAP RING, INNER	1			1100
9	003-15170-00	SNAP RING, OUTER	1			1100
10	003-15320-00	SNAP RING, OUTER	1			1100
11	011-90599-50	SOCKET HEAD BOLT	3			1100
12	011-90597-80	SOCKET HEAD BOLT	1			1100
13	011-90697-50	SOCKET HEAD BOLT	5			1100
14	006-26100-70	O RING	1			1100

FIG. 1200

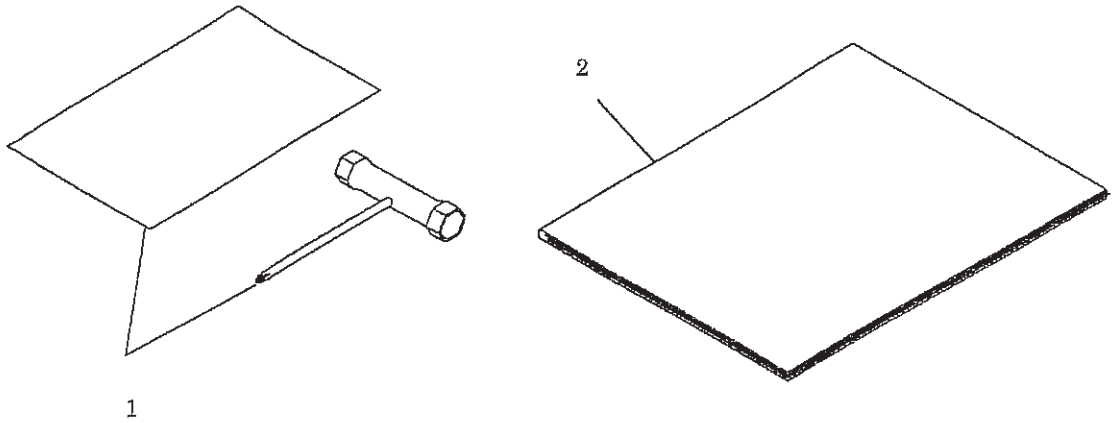

SECTION 12 ACCESSORIES GROUP

REF.	PART NO.	DESCRIPTION	QTY.	REMARKS	FROM-TO	FIG.
1	592-90020-00	TOOL	1			1200
2	592-95032-02	OWNERS MANUAL	1			1200

PRINTED IN THE USA